GENERAL DATA PUMPS AND MOTORS

Series	Pump type PLP Motor type PLM	Displacement	Max. pressure			Max. speed	Min. speed
			p_1	p_2	p_3		
		in^3/rev (cm^3/rev)	psi (bar)			min^{-1}	
POLARIS 10	PL. 10•1	0.07 (1,07)	3770 (260)	4060 (280)	4205 (290)	4000	650
	PL. 10•1,5	0.10 (1,6)	3770 (260)	4060 (280)	4205 (290)	4000	650
	PL. 10•2	0.13 (2,13)	3770 (260)	4060 (280)	4205 (290)	4000	650
	PL. 10•2,5	0.16 (2,67)	3770 (260)	4060 (280)	4205 (290)	4000	650
	PL. 10•3,15	0.20 (3,34)	3770 (260)	4060 (280)	4205 (290)	4000	650
	PL. 10•4	0.26 (4,27)	3625 (250)	3915 (270)	4060 (280)	4000	650
	PL. 10•5	0.33 (5,34)	3625 (250)	3915 (270)	4060 (280)	4000	650
	PL. 10•5,8	0.38 (6,20)	3335 (230)	3625 (250)	3770 (260)	3500	650
	PL. 10•6,3	0.41 (6,67)	3335 (230)	3625 (250)	3770 (260)	3500	650
	PL. 10•8	0.52 (8,51)	2610 (180)	2900 (200)	3045 (210)	3500	650
	PL. 10•10	0.65 (10,67)	2030 (140)	2320 (160)	2465 (170)	3500	650
POLARIS 20	PL. 20•4	0.30 (4,95)	3625 (250)	4060 (280)	4350 (300)	4000	600
	PL. 20•6,3	0.40 (6,61)	3625 (250)	4060 (280)	4350 (300)	4000	600
	PL. 20•7,2	0,44 (7,29)	3625 (250)	4060 (280)	4350 (300)	4000	600
	PL. 20•8	0.50 (8,26)	3625 (250)	4060 (280)	4350 (300)	3500	600
	PL. 20•9	0.56 (9,17)	3625 (250)	4060 (280)	4350 (300)	3500	600
	PL. 20•10,5	0.66 (10,9)	3625 (250)	4060 (280)	4350 (300)	3500	600
	PL. 20•11,2	0.69 (11,23)	3625 (250)	4060 (280)	4350 (300)	3500	600
	PL. 20•14	0.89 (14,53)	3625 (250)	4060 (280)	4350 (300)	3500	500
	PL. 20•16	1.03 (16,85)	3625 (250)	4060 (280)	4350 (300)	3000	500
	PL. 20•19	1.16 (19,09)	2900 (200)	3190 (220)	3480 (240)	3000	500
	PL. 20•20	1.29 (21,14)	2900 (200)	3190 (220)	3480 (240)	3000	500
	PL. 20•24,5	1.52 (24,84)	2465 (170)	2755 (190)	3045 (210)	2500	500
	PL. 20•25	1.61 (26,42)	2465 (170)	2755 (190)	3045 (210)	2500	500
	PL. 20•27,8	1.72 (28,21)	1885 (130)	2175 (150)	2465 (170)	2000	500
	PL. 20•31,5	2.01 (33,03)	1885 (130)	2175 (150)	2465 (170)	2000	500
POLARIS 30	PL. 30•22	1.34 (21,99)	3625 (250)	3915 (270)	4060 (280)	3000	350
	PL. 30•27	1.63 (26,70)	3625 (250)	3915 (270)	4060 (280)	3000	350
	PL. 30•34	2.11 (34,55)	3480 (240)	3770 (260)	3915 (270)	3000	350
	PL. 30•38	2.40 (39,27)	3480 (240)	3770 (260)	3915 (270)	3000	350
	PL. 30•43	2.68 (43,98)	3335 (230)	3625 (250)	3770 (260)	3000	350
	PL. 30•51	3.16 (51,83)	3045 (210)	3335 (230)	3480 (240)	2500	350
	PL. 30•61	3.74 (61,26)	2755 (190)	3045 (210)	3190 (220)	2500	350
	PL. 30•73	4.50 (73,82)	2465 (170)	2755 (190)	2900 (200)	2500	350
	PL. 30•82	4.98 (81,68)	2320 (160)	2465 (170)	2610 (180)	2200	350
	PL. 30•90	5.56 (91,10)	2175 (150)	2320 (160)	2465 (170)	2200	350

p_1= Max. continuous pressure p_2= Max. intermittent pressure p_3= Max. peak pressure

The values in the table refer to unidirectional pumps and motors. Reversible pumps and motors max pressures are 15% lower than those shown in table. For different working conditions please consult our sales department.

01/10.03

PLP 30 POLARIS 30 GEAR PUMPS PERFORMANCE CURVES

PLP 30

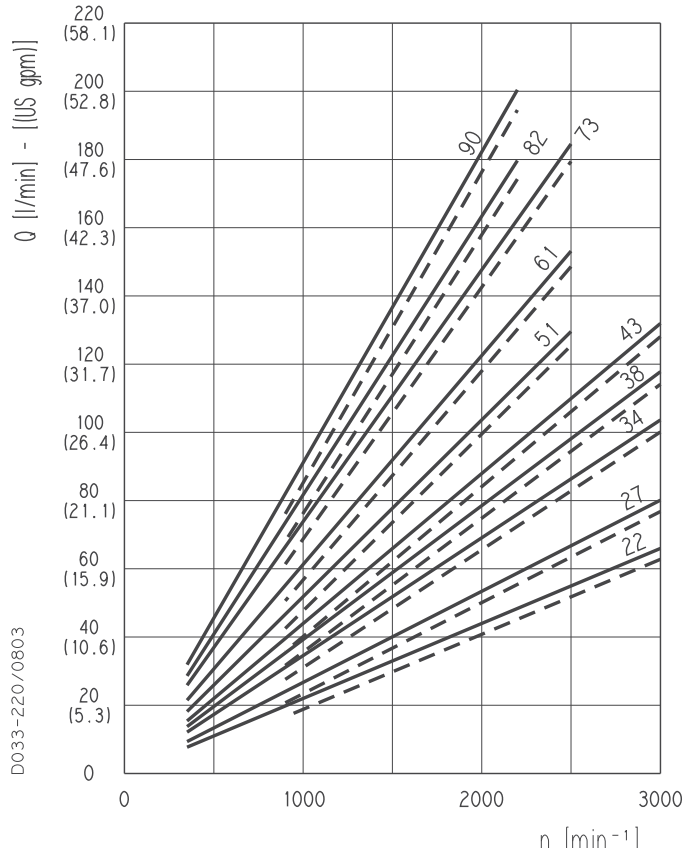

Each curve has been obtained at 122 °F (50°C), using oil with viscosity 168 SSU (36 cSt) at 104 °F (40°C) and at these pressures.

PLP 30•22	——	290 psi (20 bar)
	– –	3625 psi (250 bar)
PLP 30•27	——	290 psi (20 bar)
	– –	3625 psi (250 bar)
PLP 30•34	——	290 psi (20 bar)
	– –	3480 psi (240 bar)
PLP 30•38	——	290 psi (20 bar)
	– –	3480 psi (240 bar)
PLP 30•43	——	290 psi (20 bar)
	– –	3335 psi (230 bar)
PLP 30•51	——	290 psi (20 bar)
	– –	3045 psi (210 bar)
PLP 30•61	——	290 psi (20 bar)
	– –	2775 psi (190 bar)
PLP 30•73	——	290 psi (20 bar)
	– –	2465 psi (170 bar)
PLP 30•82	——	290 psi (20 bar)
	– –	2320 psi (160 bar)
PLP 30•90		290 psi (20 bar)
		2175 psi (150 bar)

PLP 30•22

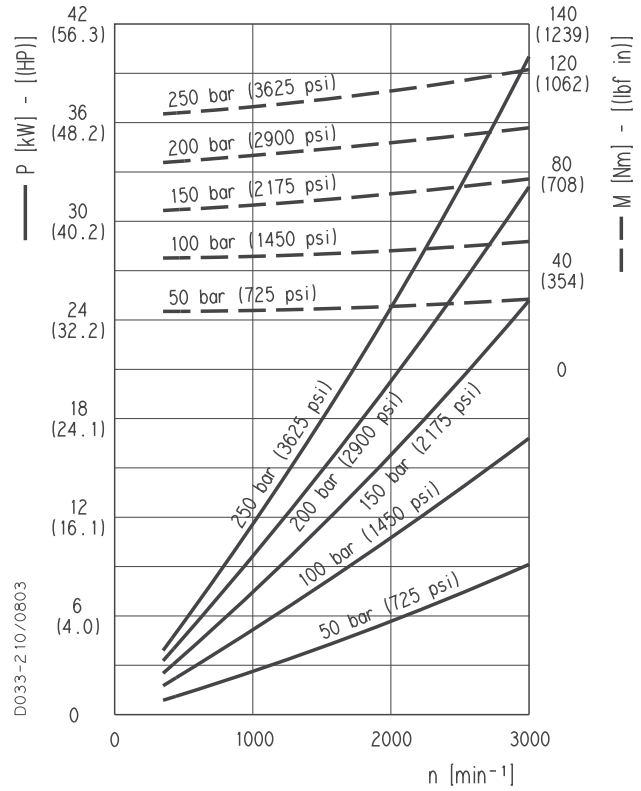

PLP 30•27

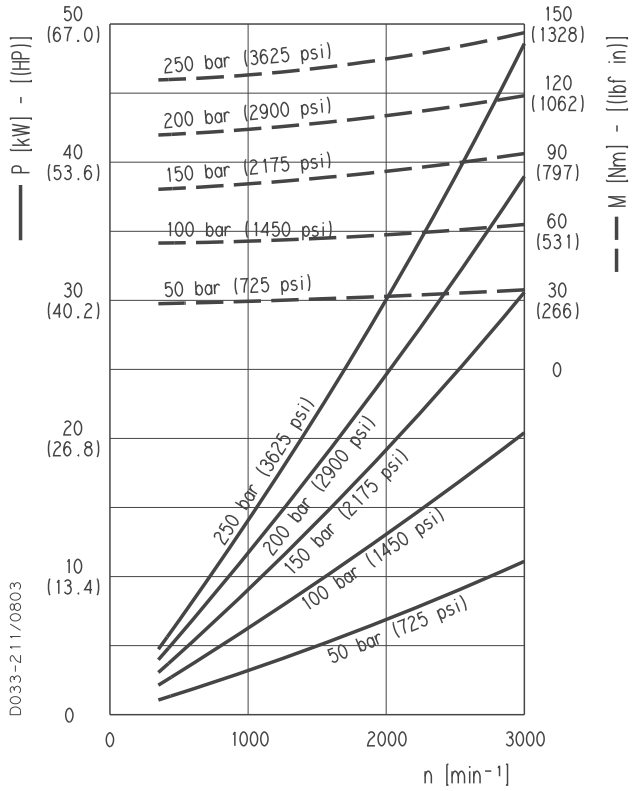

01/10.03

PLP 30 POLARIS 30 GEAR PUMPS PERFORMANCE CURVES

PLP 30•34

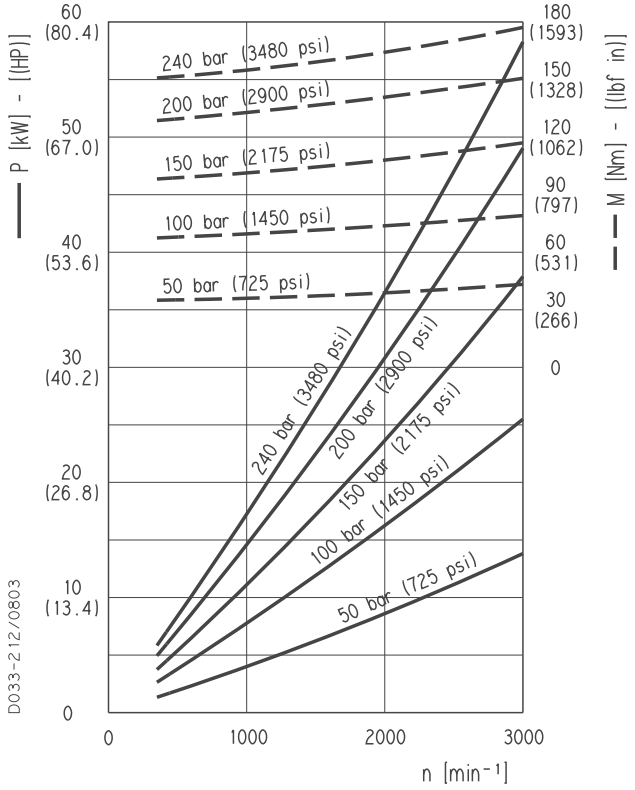

PLP 30•38

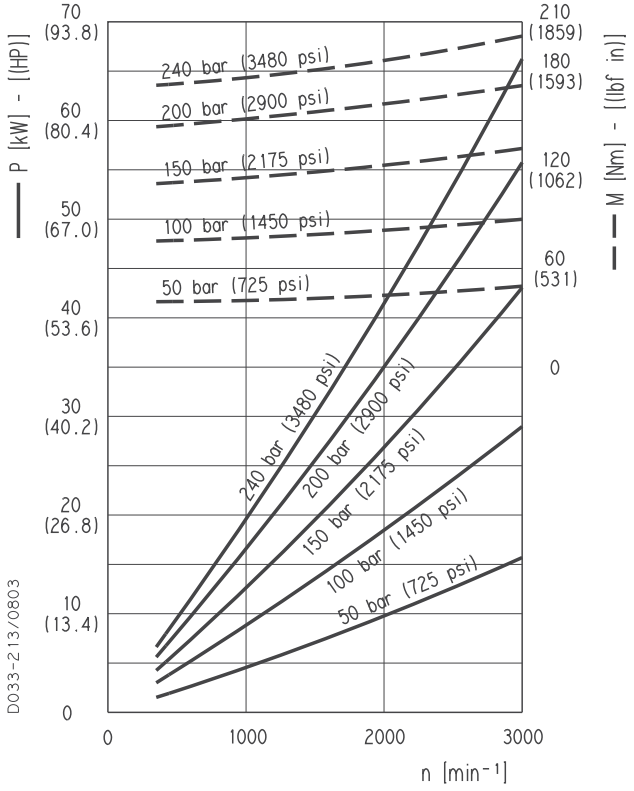

PLP 30•43

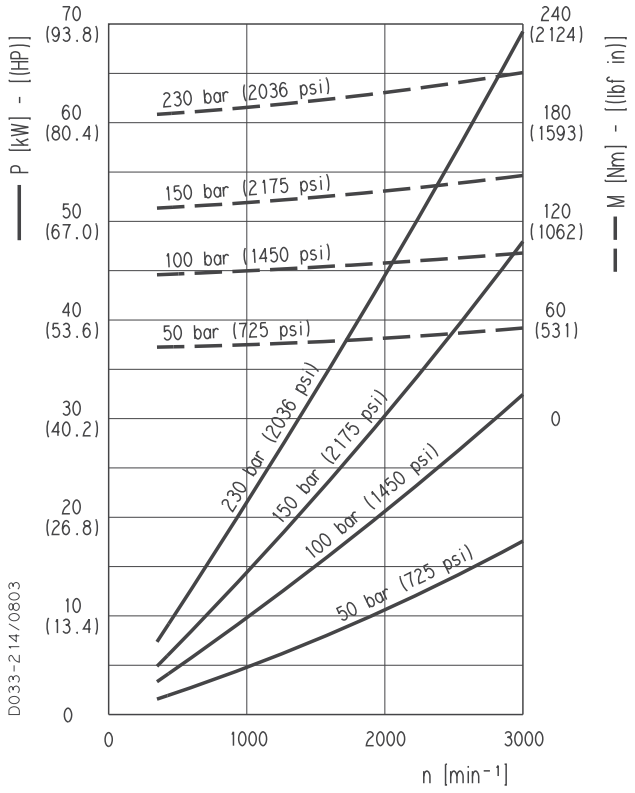

PLP 30•51

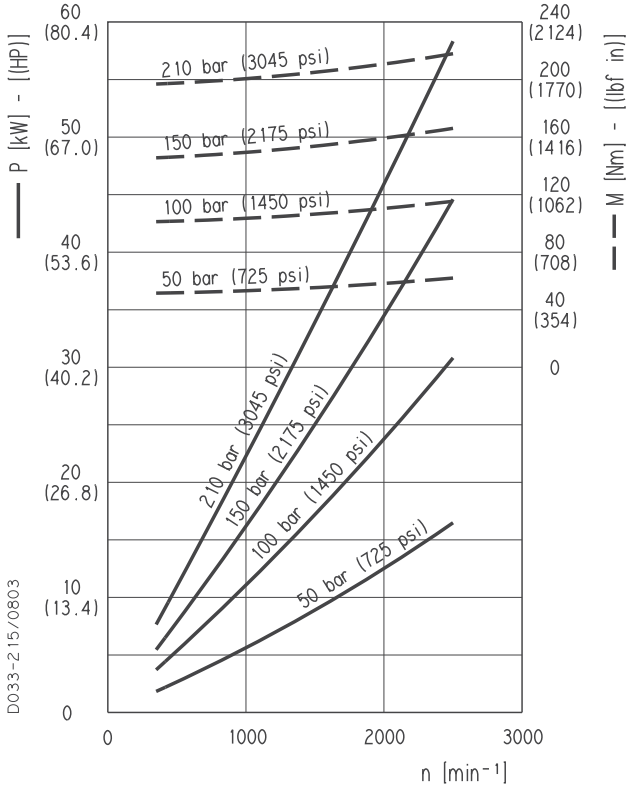

01/10.03

PLP 30 POLARIS 30 GEAR PUMPS PERFORMANCE CURVES

PLP 30•61

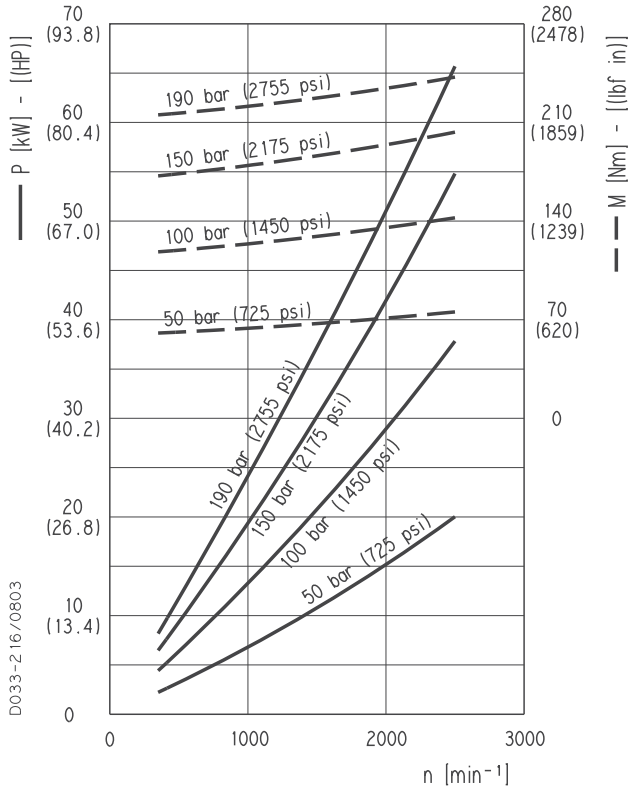

PLP 30•73

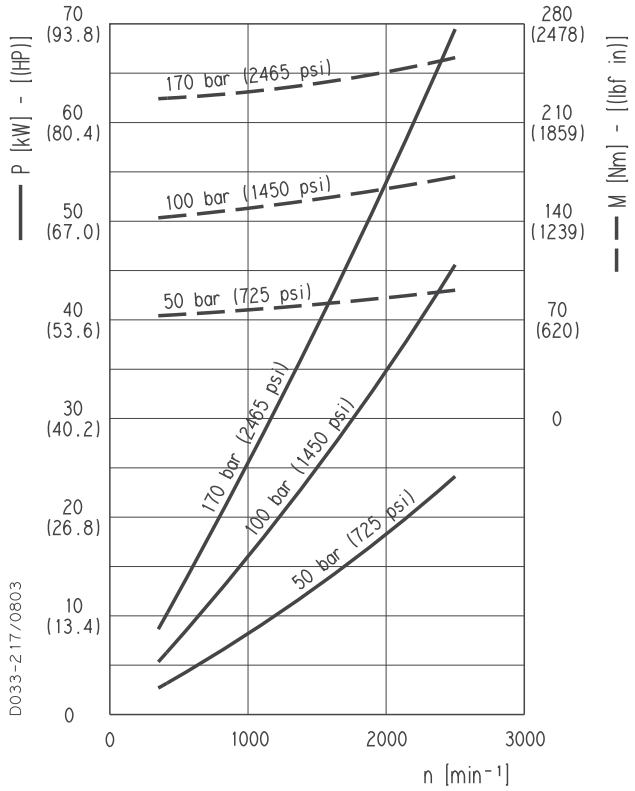

PLP 30•82

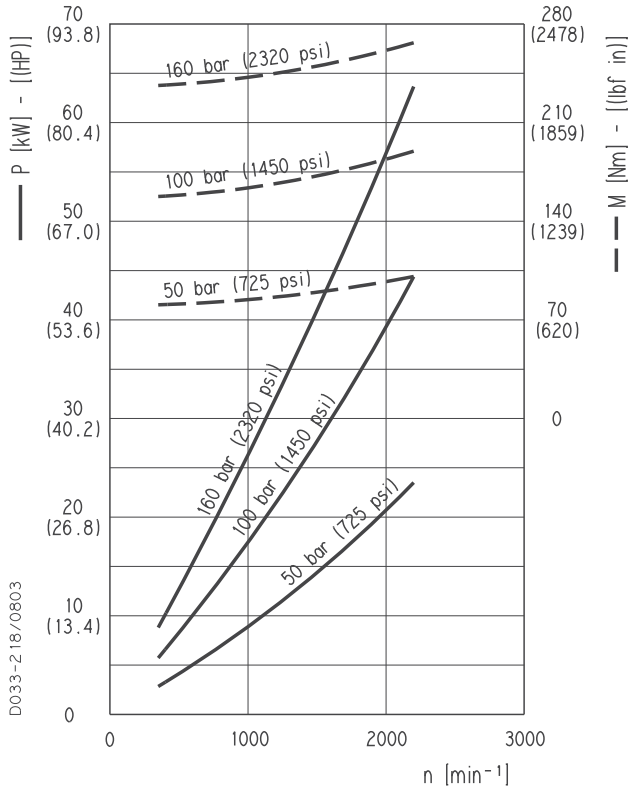

PLP 30•90

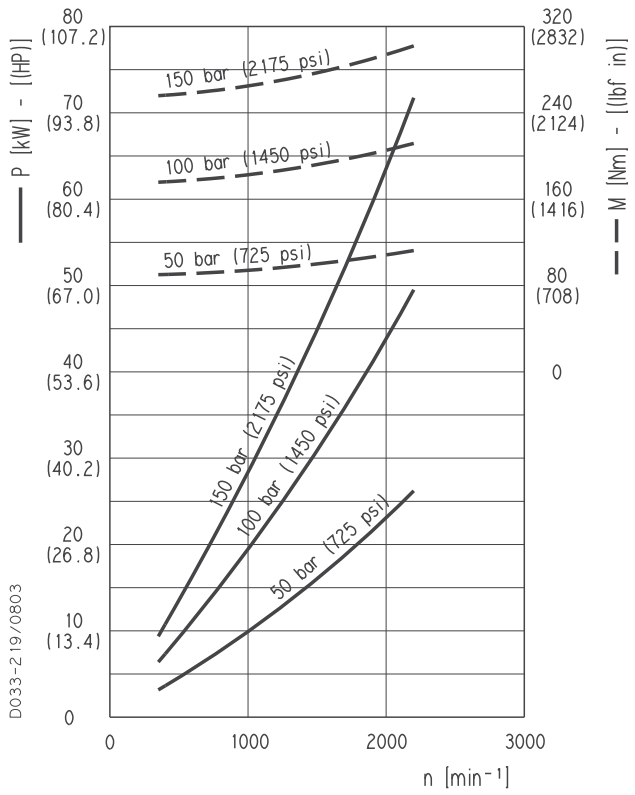

01/10.03

POLARIS 30 SINGLE UNITS SIDE PORTS L

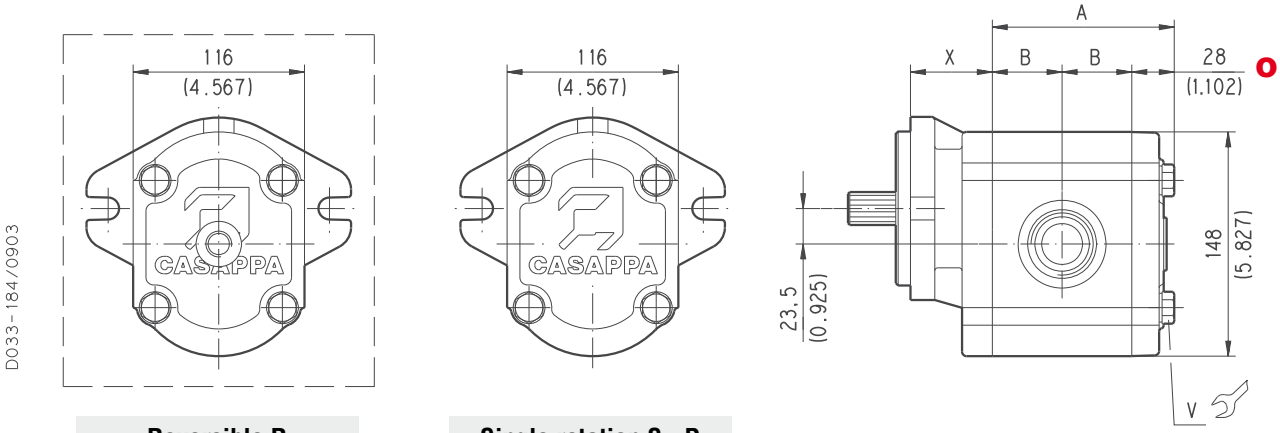

Reversible R **Single rotation S - D**

Replaces: 02/07.2006

Mounting flange type version 0	X
	mm (inch)
E3	24 (0.945)
E4	25 (0.984)
B3	28 (1.102)
S5	54 (2.1260)
U3	20,8 (0.819)

Rear cover in cast iron only.

DRIVE SHAFTS:
see page 56 and page 57
MOUNTING FLANGE:
see page 66 ÷ 68
PORTS: see page. 69 ÷ 74

Mounting flange material	Screw tightening torque Nm (lbf in)
	V
Cast iron	100 $^{\pm 10}$ (797 ÷ 974)

Pump type Motor type	A	B
	mm (inch)	mm (inch)
PL. 30•22	106 (4.1732)	39 (1.5354)
PL. 30•27	109 (4.2913)	40,5 (1.5945)
PL. 30•34	114 (4.4882)	43 (1.6929)
PL. 30•38	117 (4.6063)	44,5 (1.7520)
PL. 30•43	120 (4.7244)	46 (1.8110)
PL. 30•51	125 (4.9212)	48,5 (1.9094)
PL. 30•61	131 (5.1575)	51,5 (2.0276)
PL. 30•73	139 (5.4724)	55,5 (2.1850)
PL. 30•82	144 (5.6693)	58 (2.2835)
PL. 30•90	150 (5.9055)	61 (2.4016)

03/02.2012

POLARIS 30 DRIVE SHAFTS

EUROPEAN TAPERED 1:8 — 83

Not available with size:

30•82 30•90

Mounting face refer to flange code **E3**

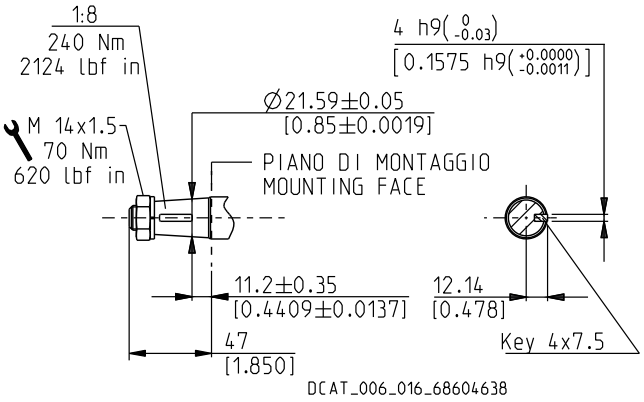

EUROPEAN TAPERED 1:8 — 84

Not available with size:

30•22 30•27 30•34 30•38

Mounting face refer to flange code **E4**

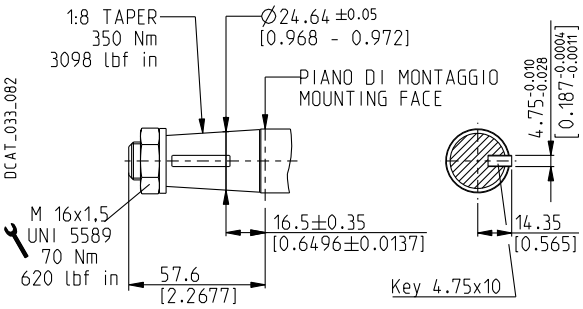

GERMAN TAPERED 1:5 — 56

Not available with size:

30•61 30•73 30•82 30•90

Mounting face refer to flange code **B3**

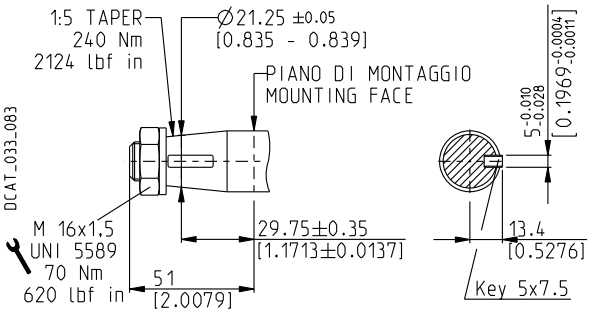

STRAIGHT — 41

Not available with size:

30•82 30•90

Mounting face refer to flange code **E3**

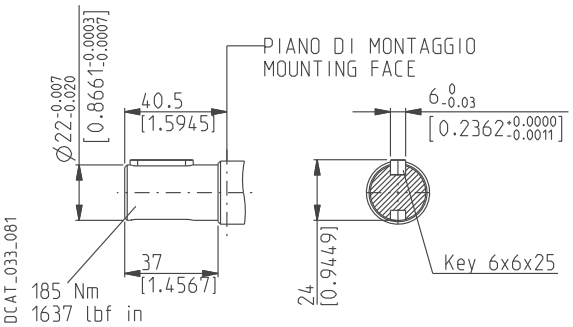

SAE "B" SPLINE — A8

Not available with size:

30•82 30•90

Mounting face refer to flange code **U3**

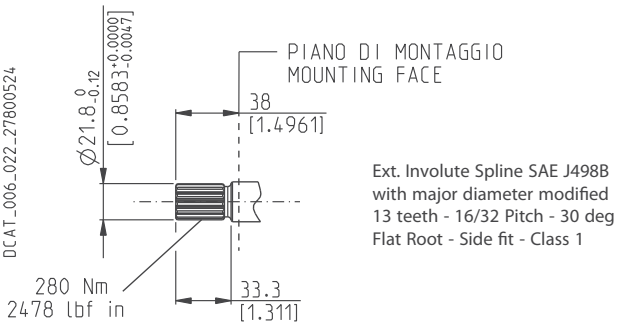

SAE "BB" SPLINE — A5

Not available with size:

30•22 30•38 30•82 30•90

Mounting face refer to flange code **U3**

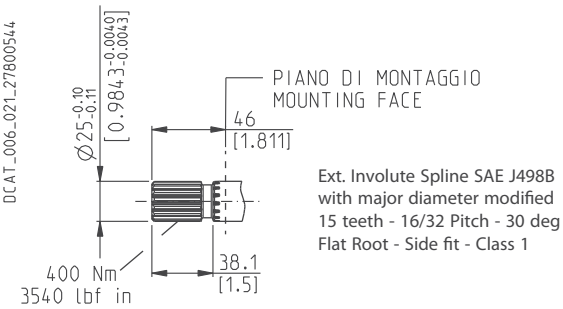

01/10.03

POLARIS 30 DRIVE SHAFTS

SAE "B" SPLINE 04

Mounting face refer to flange code **S5**

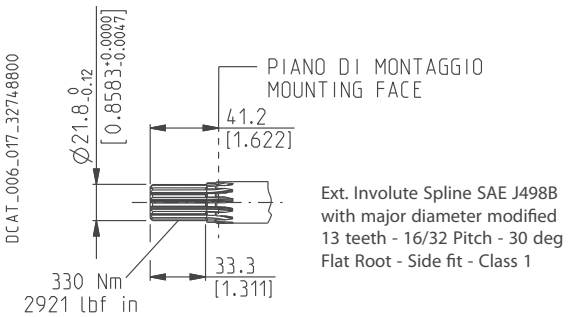

SAE "BB" SPLINE 05

Not available with size:

30•90

Mounting face refer to flange code **S5**

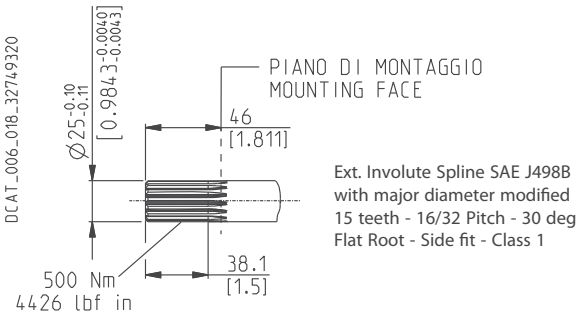

SAE "B" STRAIGHT 32

Mounting face refer to flange code **S5**

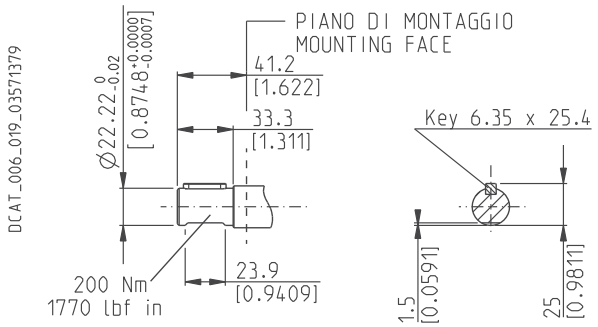

SAE "B" STRAIGHT 33

Mounting face refer to flange code **S5**

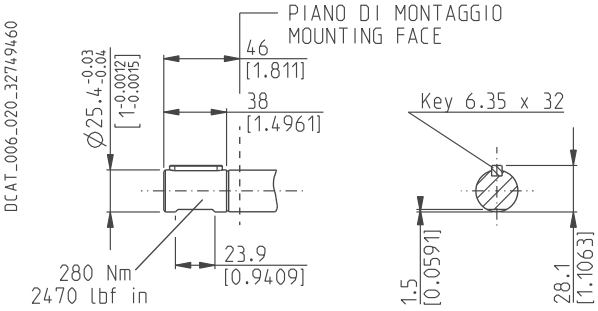

01/10.03

POLARIS 30 MOUNTING FLANGES AND TABLE OF COMPATIBILITY

EUROPEAN E3

Material: cast iron O

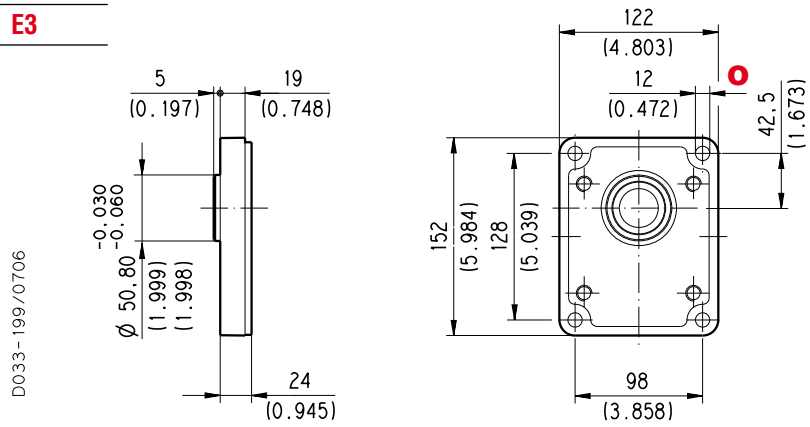

Replaces: 01/10.03

DRIVE SHAFTS
See page 56 and 57

VERSIONS See page 47	83	41	04	05	32	33	A5	A8
0	#	#	x	x	x	x	x	x

Standard combination
x Available combination

EUROPEAN E4

Material: cast iron O

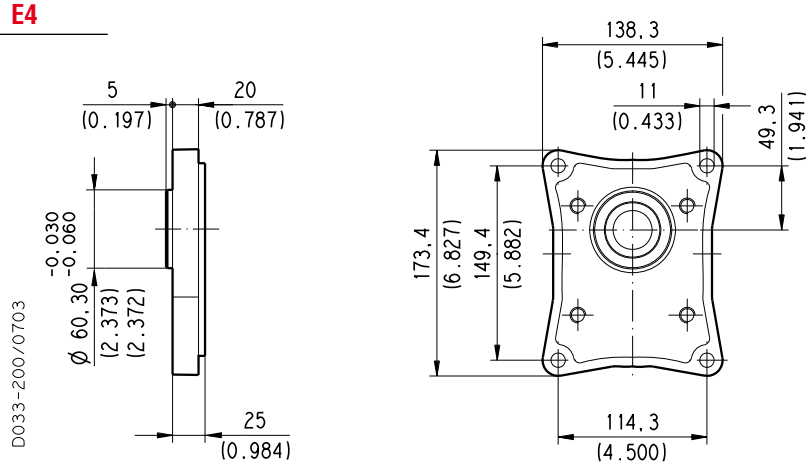

O 02/07.2006

DRIVE SHAFTS
See page 56 and 57

VERSIONS See page 47	84	41	A5	A8
0	#	x	x	x

Standard combination
x Available combination

POLARIS 30 MOUNTING FLANGES AND TABLE OF COMPATIBILITY

Replaces: 01/10.03

GERMAN B3

Material: cast iron O

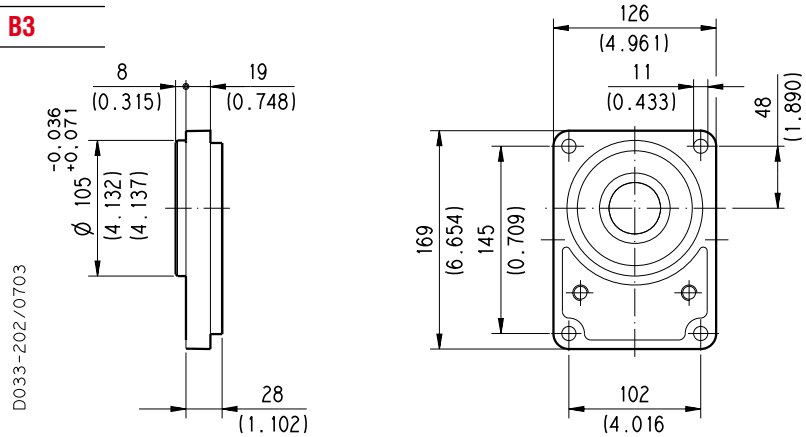

DRIVE SHAFTS
See page 56 and 57

VERSIONS See page 47	56	83	A5	A8
0	#	x	x	x

Standard combination
x Available combination

O 02/07.2006

SAE "B" 2 BOLTS S5

Material: cast iron O

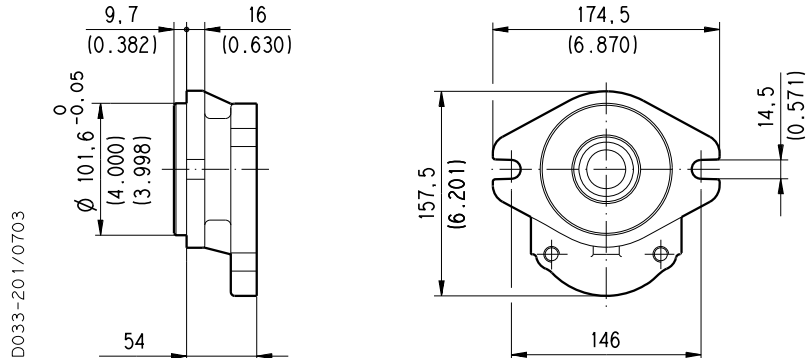

DRIVE SHAFTS
See page 56 and 57

VERSIONS See page 47	04	05	32	33
0	#	#	#	#

Standard combination
x Available combination

POLARIS 30 MOUNTING FLANGES AND TABLE OF COMPATIBILITY

SAE "B" 2 BOLTS	U3

Material: cast iron **O**

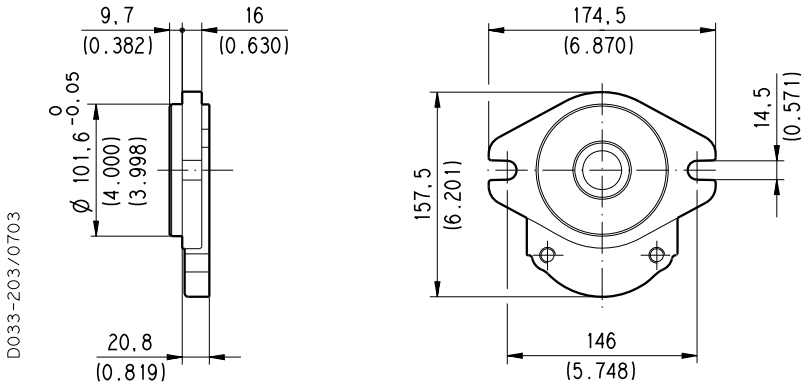

VERSIONS See page 47	A5	A8	83
0	#	#	x

DRIVE SHAFTS
See page 56 and 57

Standard combination

x Available combination

Replaces: 01/10.03

O 02/07.2006

IN/OUT PORTS TYPE

	SIDE PORTS												REAR PORTS			
PORTS TYPE	German		European		Split SSM		Spit SSS		Gas BSPP		SAE ODT		Gas BSPP		SAE ODT	
Pump type	IN	OUT	IN	OUT	IN	OUT	IN	OUT	IN	OUT	IN	OUT	IN	OUT	IN	OUT
Motor type	OUT	IN	OUT	IN	OUT	IN	OUT	IN	OUT	IN	OUT	IN	OUT	IN	OUT	IN
PL. 10•1	BB	BA							GC	GC	OB	OA	GC	GC	OB	OA
PL. 10•1,5	BB	BA							GC	GC	OB	OA	GC	GC	OB	OA
PL. 10•2	BB	BA							GC	GC	OB	OA	GC	GC	OB	OA
PL. 10•2,5	BB	BA							GC	GC	OB	OA	GC	GC	OB	OA
PL. 10•3,15	BB	BA							GC	GC	OB	OA	GC	GC	OB	OA
PL. 10•4	BB	BA							GC	GC	OB	OA	GC	GC	OB	OA
PL. 10•5	BB	BA							GD	GD	OB	OA	GD	GD	OB	OA
PL. 10•5,8	BB	BA							GD	GD	OB	OA	GD	GD	OB	OA
PL. 10•6,3	BB	BA							GD	GD	OB	OA	GD	GD	OB	OA
PL. 10•8	BB	BA							GD	GD	OC	OB	GD	GD	OB	OB
PL. 10•10	BB	BA							GD	GD	OC	OB	GD	GD	OB	OB
PL. 20•4	BE	BC	EA	EA	MA	MA	SA	SA	GD	GD	OC	OC	GD	GD	OC	OC
PL. 20•6,3	BE	BC	EA	EA	MA	MA	SA	SA	GD	GD	OC	OC	GD	GD	OC	OC
PL. 20•7,2	BE	BC	EA	EA	MA	MA	SA	SA	GD	GD	OC	OC	GD	GD	OC	OC
PL. 20•8	BE	BC	EA	EA	MA	MA	SA	SA	GD	GD	OC	OC	GD	GD	OC	OC
PL. 20•9	BE	BC	EA	EA	MA	MA	SA	SA	GD	GD	OC	OC	GD	GD	OC	OC
PL. 20•10,5	BE	BC	EA	EA	MA	MA	SA	SA	GD	GD	OC	OC	GD	GD	OC	OC
PL. 20•11,2	BE	BC	EA	EA	MA	MA	SA	SA	GD	GD	OC	OC	GD	GD	OC	OC
PL. 20•14	BE	BC	EB	EA	MB	MA	SB	SA	GE	GD	OD	OC	GE	GD	OD	OC
PL. 20•16	BE	BC	EB	EA	MB	MA	SB	SA	GE	GD	OD	OC	GE	GD	OD	OC
PL. 20•19	BE	BC	EB	EA	MB	MA	SB	SA	GE	GD	OD	OC	GE	GD	OD	OC
PL. 20•20	BE	BC	EB	EA	MB	MA	SB	SA	GE	GD	OD	OC	GE	GD	OD	OC
PL. 20•24,5	BE	BC	EB	EA	MC	MB	SC	SB	GE	GD	OD	OC	GE	GD	OD	OC
PL. 20•25	BE	BC	EB	EA	MC	MB	SC	SB	GE	GD	OD	OC	GE	GD	OD	OC
PL. 20•27,8	BE	BC	EB	EA	MC	MB	SC	SB	GE	GD	OD	OC	GE	GD	OD	OC
PL. 20•31,5	BE	BC	EB	EA	MC	MB	SC	SB	GE	GD	OD	OC	GE	GD	OD	OC
PL. 30•22	BM	BL	ED	EB	MB	MA	SB	SA	GF	GF	OF	OD				
PL. 30•27	BM	BL	ED	EB	MC	MB	SC	SB	GF	GF	OF	OD				
PL. 30•34	BM	BL	ED	EB	MC	MB	SC	SB	GF	GF	OF	OD				
PL. 30•38	BM	BL	ED	EB	MD	MC	SD	SC	GF	GF	OG	OF				
PL. 30•43	BM	BL	ED	EB	MD	MC	SD	SC	GF	GF	OG	OF				
PL. 30•46	BM	BL	ED	EB	MD	MC	SD	SC	GF	GF	OG	OF				
PL. 30•51	BM	BL	ED	EB	MD	MC	SD	SC	GF	GF	OG	OF				
PL. 30•61	BM	BL	ED	EB	ME	MD	SE	SD	GG	GF	OH	OG				
PL. 30•73	BM	BL	EF	ED	ME	MD	SE	SD	GG	GF	OH	OG				
PL. 30•82	BM	BL	EF	ED	ME	MD	SE	SD	GH	GG	OH	OG				
PL. 30•90	BM	BL	EF	ED	MF	ME	SF	SE	GH	GG	OH	OG				

01/10.03

EXTERNAL DRAIN PORTS

IN/OUT PORTS TYPE	SIDE PORTS						REAR PORTS	
	German	European	Split SSM	Spit SSS	Gas BSPP	SAE ODT	Gas BSPP	SAE ODT
PL. 10	GA	-	-	-	GA	03	GA	03
PL. 20	TA	GB	GB	03	GB	03	GB	03
PL. 30	GC	GC	GC	OA	GC	OA	-	-

DRAIN PORTS SIZES

Tightening torque for low pressure side port

GAS STRAIGHT THREAD PORTS — BSPP

British standard pipe parallel (55°) conforms to UNI - ISO 228

CODE	NOMINAL SIZE	A	Ø B	Ø C	D	E	
			mm (in)	mm (in)	mm (in)	mm (in)	Nm (lbf in)
GA	1/8”	G 1/8	16,5 (0.6496)	8,75 (0.3444)	12 (0.4724)	1 (0.0394)	5 +0,25 (44 ÷ 46)
GB	1/4”	G 1/4	21,5 (0.8465)	12 (0.4724)	15 (0.5906)	1,5 (0.0591)	15 +1 (133 ÷ 142)

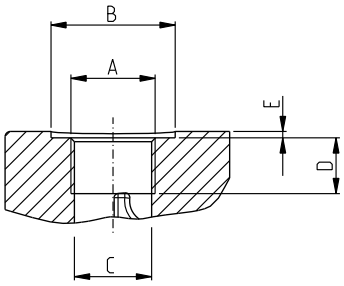

DCAT_006_026_21064779

METRIC STRAIGHT THREAD PORTS ISO 6149 — METRIC

Metric thread ISO 60° conforms to ISO/R 262

CODE	A	Ø B	Ø C	D	E	
		mm (in)	mm (in)	mm (in)	mm (in)	Nm (lbf in)
TA	M 10x1	22 (0.8661)	9 (0.3543)	13 (0.5118)	0,5 (0.0197)	10 +0,5 (89 ÷ 93)

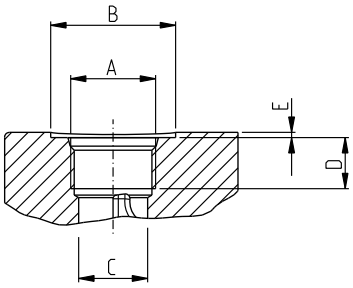

DCAT_006_027_21060524

SAE STRAIGHT THREAD PORTS J514 — ODT

American straight UNC-UNF 60° conforms to ANSI B 1.1

CODE	A	Ø B	Ø C	D	E	
		mm (in)	mm (in)	mm (in)	mm (in)	Nm (lbf in)
03	7/16”-20 UNF-2B	21 (0.8267)	9,5 (0.3740)	14 (0.5512)	1 (0.0394)	12 +1 (106 ÷ 115)

Other drain ports are shown on subsequent pages.

01/10.03

PORTS SIZE

Tightening torque for low pressure side port

Tightening torque for high pressure side port [values obtained at 5075 psi (350 bar)]

For reversible rotation, please consult only the tightening torque for high pressure side port

GERMAN FLANGED PORTS - 4 Bolts — GERMAN

Metric thread ISO 60° conforms to ISO/R 262

CODE	A	B	C		
	mm (in)	mm (in)	Thread Depth mm (in)	Nm (lbf in)	Nm (lbf in)
BA	8 (0.3150)	30 (1.1811)	M6 12 (0.4724)	8 +0,5 (71 ÷ 75)	8 +0,5 (71 ÷ 75)
BB	13 (0.5118)	30 (1.1811)	M6 12 (0.4724)	8 +0,5 (71 ÷ 75)	8 +0,5 (71 ÷ 75)
BC	15 (0.5906)	35 (1.3780)	M6 12 (0.4724)	8 +0,5 (71 ÷ 75)	8 +0,5 (71 ÷ 75)
BE	20 (0.7874)	40 (1.5748)	M6 12 (0.4724)	8 +0,5 (71 ÷ 75)	8 +0,5 (71 ÷ 75)
BL	19 (0.7480)	55 (2.1654)	M8 18 (0.7087)	15 +1 (133 ÷ 142)	20 +1 (177 ÷ 186)
BM	27 (1.0630)	55 (2.1654)	M8 18 (0.7087)	15 +1 (133 ÷ 142)	20 +1 (177 ÷ 186)

DCAT_033_028_17681888

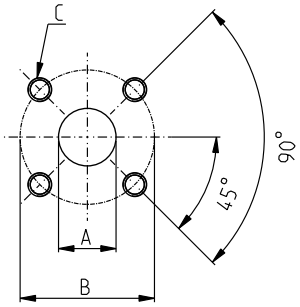

EUROPEAN FLANGED PORTS - 4 Bolts — EUROPEAN

Metric thread ISO 60° conforms to ISO/R 262

CODE	A	B	C		
	mm (in)	mm (in)	Thread Depth mm (in)	Nm (lbf in)	Nm (lbf in)
EA	13 (0.5118)	30 (1.1811)	M 6 13 (0.5118)	8 +0,5 (71 ÷ 75)	8 +0,5 (71 ÷ 75)
EB	19 (0.7480)	40 (1.5748)	M 8 14 (0.5512)	15 +1 (133 ÷ 142)	15 +1 (133 ÷ 142)
			M 8 (◆) 18 (0.7087)	15 +1 (◆) (133 ÷ 142)	15 +1 (◆) (133 ÷ 142)
ED	27 (1.0630)	51 (2.0079)	M 10 18 (0.7087)	20 +1 (177 ÷ 186)	30 +2,5 (266 ÷ 288)
EF	33 (1.2992)	62 (2.4409)	M 12 18 (0.7087)	25 +1 (221 ÷ 230)	50 +2,5 (443 ÷ 465)

(◆) For POLARIS 30

DCAT_006_024_21060533

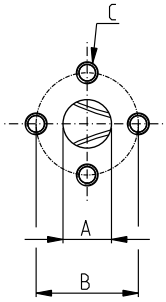

01/10.03

PORTS SIZES

Tightening torque for low pressure side port

Tightening torque for high pressure side port [values obtained at 5075 psi (350 bar)]

For reversible rotation, please consult only the tightening torque for high pressure side port

SAE FLANGED PORTS J518 - Standard pressure series 3000 PSI — SSM

Metric thread ISO 60° to ISO/R 262

CODE	A mm (in)	B mm (in)	C mm (in)	D Thread Depth mm (in)	Nm (lbf in)	Nm (lbf in)
MA	12,5 (0.4921)	38,1 (1.50)	17,5 (0.6890)	M 8 14 (0.5512)	15 +1 (133 ÷ 142)	15 +1 (133 ÷ 142)
				M 8 (◆) 22 (0.8661)	20 +1 (◆) (177 ÷ 186)	20 +1 (◆) (177 ÷ 186)
MB	19 (0.7480)	47,6 (1.8740)	22,2 (0.8740)	M 10 14 (0.5512)	20 +1 (177 ÷ 186)	25 +1 (266 ÷ 288)
				M 10 (◆) 22 (0.8661)	20 +1 (◆) (177 ÷ 186)	35 +2,5 (◆) (310 ÷ 332)
MC	25,4 (1.0000)	52,4 (2.0630)	26,2 (1.0315)	M 10 14 (0.5512)	20 +1 (177 ÷ 186)	25 +1 (266 ÷ 288)
				M 10 (◆) 22 (0.8661)	20 +1 (◆) (177 ÷ 186)	35 +2,5 (◆) (310 ÷ 332)
MD	30,5 (1.2008)	58,7 (2.3110)	30,2 (1.1890)	M 10 15 (0.5906)	20 +1 (177 ÷ 186)	30 +2,5 (266 ÷ 288)
				M 10 (◆) 22 (0.8661)	20 +1 (◆) (177 ÷ 186)	35 +2,5 (◆) (310 ÷ 332)
ME	39,3 (1.5472)	69,8 (2.7480)	35,7 (1.4055)	M 12 22 (0.8661)	30 +2,5 (266 ÷ 288)	60 +5 (531 ÷ 575)
MF	51 (2.0079)	77,8 (3.0630)	42,9 (1.6890)	M 12 22 (0.8661)	30 +2,5 (266 ÷ 288)	60 +5 (531 ÷ 575)

(◆) For POLARIS 30

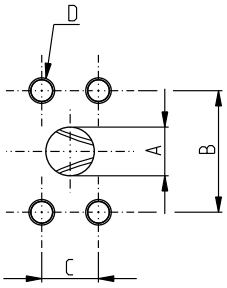

DCAT_006_025_21064252

SAE FLANGED PORTS J518 - Standard pressure series 3000 PSI — SSS

American straight thread UNC-UNF 60° conforms to ANSI B 1.1

CODE	A mm (in)	B mm (in)	C mm (in)	D Thread Depth mm (in)	Nm (lbf in)	Nm (lbf in)
SA	12,5 (0.4921)	38,1 (1.50)	17,5 (0.6890)	5/16-18 UNC-2B 14 (0.5512)	15 +1 (133 ÷ 142)	15 +1 (133 ÷ 142)
				5/16-18 UNC-2B (◆) 22 (0.8661)	20 +1 (◆) (177 ÷ 186)	20 +1 (◆) (177 ÷ 186)
SB	19 (0.7480)	47,6 (1.8740)	22,2 (0.8740)	3/8-16 UNC-2B 14 (0.5512)	20 +1 (177 ÷ 186)	20 +1 (177 ÷ 186)
				3/8-16 UNC-2B (◆) 22 (0.8661)	30 +2,5 (◆) (266 ÷ 288)	20 +1 (◆) (177 ÷ 186)
SC	25,4 (1.0000)	52,4 (2.0630)	26,2 (1.0315)	3/8-16 UNC-2B 14 (0.5512)	20 +1 (177 ÷ 186)	25 +1 (221 ÷ 230)
				3/8-16 UNC-2B (◆) 22 (0.8661)	20 +1 (◆) (177 ÷ 186)	30 +2,5 (◆) (266 ÷ 288)
SD	30,5 (1.2008)	58,7 (2.3110)	30,2 (1.1890)	7/16-14 UNC-2B 22 (0.8661)	20 +1 (177 ÷ 186)	45 +2,5 (398 ÷ 420)
SE	39,3 (1.5472)	69,8 (2.7480)	35,7 (1.4055)	1/2-13 UNC-2B 22 (0.8661)	30 +2,5 (266 ÷ 288)	70 +5 (620 ÷ 664)
SF	51 (2.0079)	77,8 (3.0630)	42,9 (1.6890)	1/2-13 UNC-2B 22 (0.8661)	30 +2,5 (◆) (266 ÷ 288)	70 +5 (620 ÷ 664)

(◆) For POLARIS 30

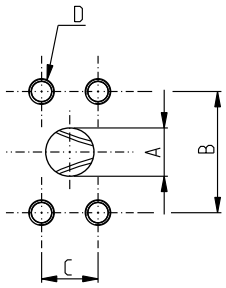

DCAT_006_028_21060740

01/10.03

PORTS SIZES

Tightening torque for low pressure side port

Tightening torque for high pressure side port [values obtained at 5075 psi (350 bar)]

For reversible rotation, please consult only the tightening torque for high pressure side port

Replaces: 01/10.03

GAS STRAIGHT THREAD PORTS — BSPP

British standard pipe parallel (55°) conforms to UNI - ISO 228

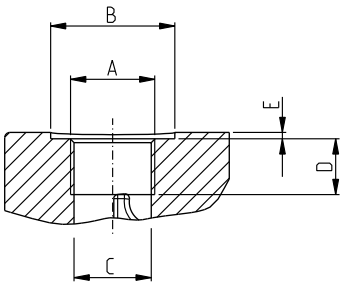

DCAT_006_026_21064779

CODE	Nominal size	A	Ø B mm (in)	Ø C mm (in)	D mm (in)	E mm (in)	Nm (lbf in)	Nm (lbf in)
GC ○	3/8”	G 3/8	30 (#) (1.1811)	15 (0.5906)	10 (#) (0.3937)	2 (#) (0.0787)	15 +1 (#) (133 ÷ 142)	—
			—		14 (0.5512)	—	15 +1 (133 ÷ 142)	25 +1 (221 ÷ 230)
GD ○	1/2”	G 1/2	—	19 (0.7480)	14 (0.5512)	—	20 +1 (177 ÷ 186)	50 +2,5 (443 ÷ 465)
					17 (◆) (0.6693)			
GE	3/4”	G 3/4	—	24,5 (0.9646)	18 (0.7087)	—	30 +2,5 (266 ÷ 288)	90 +5 (797 ÷ 841)
GF	1”	G 1	—	30,5 (1.2008)	18 (0.7086)	—	50 +2,5 (443 ÷ 465)	130 +10 (1151 ÷ 1239)
GG	1” 1/4	G 1 1/4	—	39 (1.5354)	22 (0.8661)	—	60 +5 (531 ÷ 575)	170 +10 (1505 ÷ 1593)
GH	1” 1/2	G 1 1/2	—	45 (1.7716)	24 (0.9448)	—	70 +5 (620 ÷ 664)	210 +15 (1859 ÷ 1992)

(#) = Drain port

(◆) For POLARIS 20

○ 02/07.2006

PORTS SIZES

Tightening torque for low pressure side port

Tightening torque for high pressure side port [values obtained at 5075 psi (350 bar)]

For reversible rotation, please consult only the tightening torque for high pressure side port

SAE STRAIGHT THREAD PORTS J514 — ODT

American straight thread UNC-UNF 60° conforms to ANSI B 1.1

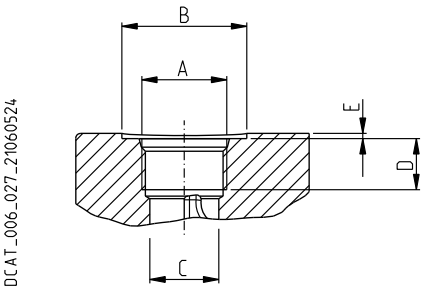

CODE	Nominal size	A	Ø B mm (in)	Ø C mm (in)	D mm (in)	E mm (in)	Nm (lbf in)	Nm (lbf in)
OA	3/8”	9/16” - 18 UNF - 2B	26 (1.0236)	13 (0.5118)	15 (0.5906)	1 (0.03934)	15 +1 (133 ÷ 142)	25 +1 (221 ÷ 230)
						2 (#) (0.0787)	15 +1 (#) (133 ÷ 142)	—
OB	1/2”	3/4” - 16 UNF - 2B	32 (1.2598)	17,5 (0.690)	15 (0.5906)	—	20 +1 (177 ÷ 186)	45 +2,5 (398 ÷ 420)
OC	5/8”	7/8” - 14 UNF - 2B	35 (1.3780)	20,5 (0.8071)	15 (◆) (0.5906)	0,5 (0.0197)	30 +2,5 (266 ÷ 288)	70 +5 (620 ÷ 664)
					17 (0.6693)			
OD	3/4”	1 1/16” - 12 UNF - 2B	42 (1.6535)	24,8 (0.9764)	20 (0.7874)	0,5 (0.0197)	40 +2,5 (354 ÷ 376)	120 +10 (1062 ÷ 1151)
OF	1”	1 5/16” - 12 UNF - 2B	49 (1.9291)	30,5 (1.2008)	20 (0.7874)	0,5 (0.0197)	60 +5 (531 ÷ 575)	170 +10 (1505 ÷ 1593)
OG	1” 1/4	1 5/8” - 12 UNF - 2B	58 (2.2835)	39,1 (1.5394)	20 (0.7874)	0,5 (0.0197)	70 +5 (620 ÷ 664)	200 +15 (1770 ÷ 1858)
OH	1” 1/2	1 7/8” - 12 UNF - 2B	65 (2.5591)	45 (1.7717)	20 (0.7874)	0,5 (0.0197)	100 +5 (885 ÷ 929)	270 +15 (2389 ÷ 2522)

(#) = Drain port

(◆) For POLARIS 10

01/10.03